DCT 2000

User Guide

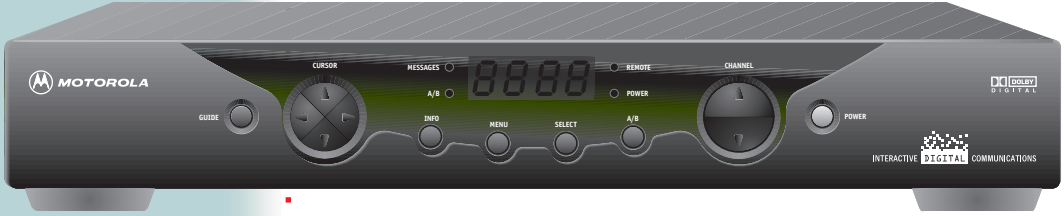

MOTOROLA

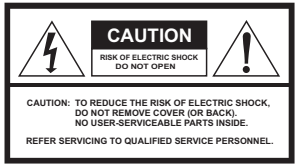

Graphical symbols and supplemental warning marking locations on bottom of terminal.

WARNING

TO PREVENT FIRE OR SHOCK HAZARD, DO NOT EXPOSE THIS APPLIANCE TO RAIN OR MOISTURE.

CAUTION

TO PREVENT ELECTRIC SHOCK, DO NOT USE THIS (POLARIZED) PLUG WITH AN EXTENSION CORD, RECEPTACLE, OR OTHER OUTLET UNLESS THE BLADES CAN BE FULLY INSERTED TO PREVENT BLADE EXPOSURE.

The lightning flash with arrowhead symbol, within an equilateral triangle, is intended to alert the user to the presence of unisulated "dangerous voltage" within the product's enclosure that may be of sufficient magnitude to constitute a risk of electric shock to persons.

The exclamation point, within an equilateral triangle, is intended to alert the user to the presence of important operating and maintenance (servicing) instructions in the literature accompanying the appliance.

This installation should be made by a qualified service person and should conform to all local codes.

REPAIRS

If you find the unit in need of repair, contact your cable system operator for repair or replacement.

NOTE TO CATV SYSTEM INSTALLER

This reminder to call the CATV system installer's attention to Article 820-40 of the NEC that provides guidelines for proper grounding and, in particular, specifies that the cable ground shall be connected to the grounding system of the building, as close as possible to the point of cable entry as practical.

EXAMPLE OF ANTENNA GROUNDING

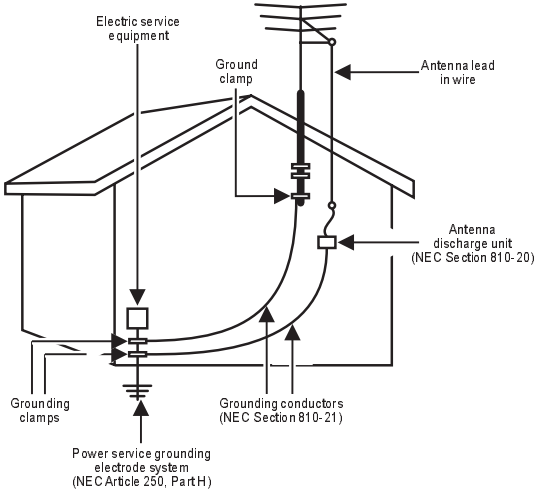

NEC=NATIONAL ELECTRICAL CODE

Copyright © 2000 by Motorola Corporation. All rights reserved. No part of the contents of this book may be reproduced or transmitted in any form or by any means without written permission of the publisher.
Dolby Digital and Dolby Surround are registered trademarks of Dolby Laboratories, Inc.
Motorola and the Motorola logo are registered trademarks of Motorola Corporation.

IMPORTANT SAFEGUARDS

1 Read instructions
All the safety and operating instructions should be read before the appliance is operated.

2 Retain instructions
The safety and operating instructions should be retained for future reference.

3 Heed warnings
All warnings on the appliance and in the operating instructions should be adhered to.

4 Follow instructions
All operating and use instructions should be followed.

5 Cleaning
Unplug this product from the wall outlet before cleaning. Do not use liquid cleaners or aerosol cleaners. Use a damp cloth for cleaning.

6 Attachments
Do not use attachments not recommended as they may cause hazard.

7 Water and moisture
Do not use this equipment near water; for example, near a bathtub, wash bowl, kitchen sink, or laundry-tub, in a wet basement, or near a swimming pool, and the like.

8 Accessories
Do not place this product on an unstable cart, stand, tripod, bracket, or table. The product may fall causing serious injury and serious damage to the appliance. Use only with a cart, stand, tripod, bracket, or table recommended by the manufacturer, or sold with the equipment. Any mounting of the appliance should follow the manufacturer's instructions, and should use a mounting accessory recommended by the manufacturer.

9 Ventilation
Slots and openings in the cabinet are provided for ventilation and to ensure reliable operation of the equipment and to protect it from overheating. The openings should never be blocked by placing the product on a bed, sofa, rug, or similar surface. Equipment should never be placed near or over a radiator or heat register, or in a built-in installation such as a bookcase or rack unless proper ventilation is provided.

10 Power sources
This product should be operated only from the type of power sources indicated on the marking label. If you are not sure of the type of power supplied to your home, consult your local power company. For equipment intended to operate from battery power, or other sources, refer to the operating instructions.

11 Ground or polarization
This equipment may be equipped with a polarized alternating-current line plug (a plug having one blade wider than the other). This plug will fit into the power outlet only one way. This is a safety feature. If you are unable to insert the plug fully into the outlet, try reversing the plug. If the plug should still fail to fit, contact your electrician to replace your obsolete outlet. Do not defeat the safety purpose of the polarized plug.

12 Alternate warnings
This equipment may be equipped with a 3-wire grounding-type plug, a plug having a third (grounding) pin. This pin will only fit into a grounding-type power outlet. This is a safety feature. If you are unable to insert the plug into the outlet, contact your electrician to replace your obsolete outlet. Do not defeat the safety purpose of the grounding-type plug.

13 Power cord protection
Power supply cords should be routed so that they are not likely to be walked on or pinched by items placed upon or against them, paying particular attention to cords at plugs, convenience receptacles, and the point where they exit from the appliance.

14 Outdoor Antenna Grounding
If an outside antenna or cable system is connected to the equipment, be sure the antenna or cable system is grounded as to provide some protection against voltage surges and built-up static charges.

15 Lightning
For added protection for this equipment during a lightning storm, or when it is left unattended and unused for long periods of time, unplug it from the wall outlet and disconnect the antenna or cable system. This will prevent damage to the video product due to lightning and power line surges.

16 Power lines
An outside antenna system should not be located in the vicinity of overhead power lines or where it can fall into such power lines or circuits. When installing an outside antenna system, extreme care should be taken to keep from touching such power lines or circuits as contact with them may be fatal.

17 Overloading
Do not overload wall outlets and extension cords as this can result in a risk of fire or electrical shock.

18 Object and liquid entry
Never push objects of any kind into this equipment through openings as they may touch dangerous voltage points or short-out parts that could result in a fire or electrical shock. Never spill liquid of any kind on the product.

19 Servicing
Do not attempt to service this equipment yourself as opening or removing covers may expose you to dangerous voltage or other hazards, refer all servicing to qualified service personnel.

20 Damage requiring service
Unplug this equipment from the wall outlet and refer servicing to qualified service personnel under the following conditions:

a When the power supply cord or plug is damaged.

b If the equipment has been exposed to rain or water.

c If liquid has been spilled, or objects have fallen into the equipment.

d If the equipment does not operate normally by following the operating instructions. Adjust only those controls that are covered by the operating instructions as an improper adjustment of other controls may result in damage and will often require extensive work by a qualified technician to restore the equipment to its normal operation.

e If the equipment has been dropped or cabinet has been damaged.

f When the equipment exhibits a distinct change in performance, indicating a need for service.

21 Replacement parts
When replacement parts are required, be sure the service technician has used replacement parts specified by the manufacturer or have the same characteristics as the original part. Unauthorized substitutions may result in fire, electric shock, or other hazards.

22 Safety check
Upon completion of any service or repairs to this video product, ask the service technician to perform safety checks to determine that the product is in proper operational condition.

23 Telephone equipment
Observe the following precautions when installing telephone modem equipment:

a Never install telephone wiring during a lightning storm.

b Never install telephone jacks in a wet location unless the jack is specifically designed for wet locations.

c Never touch uninsulated telephone wires or terminals unless the telephone lines have been disconnected at the network interface.

d Use caution when installing or modifying telephone lines.

24 Battery usage
Notwithstanding any information provided by GI in this manual regarding the use of batteries, the end user assumes all responsibility and liability to use and dispose of batteries in accordance with all applicable laws, rules and regulations. GI will not be liable to anyone for the end user's failure to use and/or dispose of batteries in the proper manner and in accordance with such laws, rules and regulations, or for any defect contained in batteries which may cause injury damage to persons or property.

CONTENTS

Introduction.....2
Front Panel.....3
Rear Panel.....6
Rear Panel Options.....9

Recording Your Connections..... 10

Using the Remote Control 11
Installing Batteries.....15

Basic Operation.....16
Turning Power On and Off.....16
Changing Channels 16
Adjusting the Volume.....16
Electronic Program Guide 17

Audio/Video Connections.....18

Connecting your DCT 2000.....19
Standard TV Cabling.....19
Standard VCR Cabling.....20
Cabling with RF Bypass.....21
Composite Baseband and S-Video.....22
Composite VCR Cabling 23
Stereo Cabling Diagram (VCR to Stereo) 24
Stereo Cabling Diagram (TV to Stereo).....25
Baseband with Dolby Digital.....26

Troubleshooting..... 27

INTRODUCTION

Your DCT 2000 includes one or more of the following features:

- Remote control
- Volume control
- Parental control
- Favorite channel recall
- Sleep and alarm timers
- Easy Pay-Per-View purchases
- Electronic program guide (EPG)
- Video on Demand
- Digital audio

Congratulations on your purchase of the state-of-the-art DCT 2000 digital consumer terminal. The DCT 2000 brings unsurpassed digital audio and video quality to your TV viewing. Electronic program guide menus provide convenient control of selecting and viewing programs. It's simple to set up and easy to operate.

You can purchase Pay-Per-View special events, recent movies or Video on Demand. Video on Demand is similar to renting a video, including the ability to pause, rewind, and fast forward.

This guide introduces you to the features and operation of the DCT 2000. Access to the DCT 2000 features is gained through the electronic program guide.

Be sure to read your electronic program guide instruction manual to get the most out of your DCT 2000.

Front Panel

The DCT 2000 front panel has 12 keys and an LED display. Use the keys to perform basic functions such as changing channels and powering on and off. Display the current channel or time of day on the LED by changing the default settings in the electronic program guide.

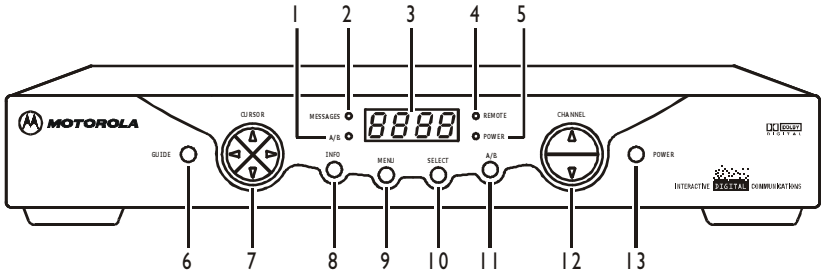

INTRODUCTION

	Item	Description
1	A/B	Lights if optional switch is activated (see Rear Panel Options)
2	MESSAGES	Lights to indicate that a message is present
3	8888	Displays current channel number or time of day
4	REMOTE	Flashes when an error-free signal is received from the remote control
5	POWER	Lights when the unit is turned on
6	GUIDE	Displays the electronic program guide
7	CURSOR	Moves the cursor in menus and electronic program guide screens
8	INFO	Displays current channel and program information

	Item	Description
9	MENU	Displays the Main menu
10	SELECT	Selects menu options, Pay-Per-View (PPV) events, and tunes channels from the electronic program guide
11	A/B	Manually enables optional modules (a cable-ready TV is required for this function)
12	CHANNEL	Changes the channel up and down
13	POWER	Turns the DCT 2000 on and off

Rear Panel

Before you begin installing the DCT 2000 take a moment to become familiar with the rear panel connections. The rear panel connectors are for system cabling, and an AC power cord connects the DCT 2000 to an electrical power outlet. For cabling diagrams, see Connecting Your DCT 2000.

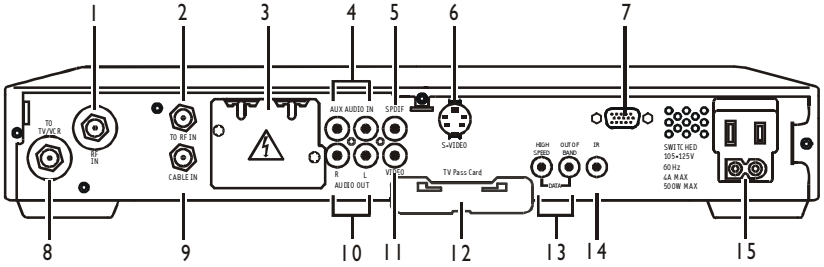

	Item	Description
1	**RF IN**	A coaxial input that is connected to the TO RF IN, see Connecting the DCT 2000.
2	**TO RF IN**	A coaxial input that directs the cable signal to other connections on the DCT 2000.
3	**Removable plate**	This plate covers the location for an optional telephone module. Available if your service provider offers telephone communication.
4	**AUX AUDIO IN**	RCA audio inputs providing loop-through audio from auxiliary audio equipment.
5	**SPDIF**	A SPDIF RCA connector that provides Dolby Digital® audio or PCM audio (digital audio recording). The audio settings are defined in the electronic program guide.
6	**S-VIDEO**	An S-Video connector sending high quality video to external devices (high-end VCR or TV) that accept S-Video.
7	**Parallel port**	A serial data connector to interface external data devices such as a printer.
8	**TO TV/VCR**	A coaxial output to connect the DCT 2000 to the TV or VCR.
9	**CABLE IN**	A coaxial input for the incoming signal from the wall outlet.
10	**AUDIO OUT**	Left/right RCA stereo outputs connect the DCT 2000 to your stereo.

	Item	Description
11	**VIDEO**	This RCA video output connects the DCT 2000 to a composite (baseband) TV.
12	**TV Pass card slot**	This space is reserved for future use.
13	**Data outputs**	For future use with high-speed, high-definition components.
14	**IR Output**	An RCA output connecting the optional Infrared (IR) Blaster attachment for your DCT 2000.
15	**AC power**	This is a two-plug AC power outlet. The bottom plug is for attaching a power cord. The top plug can be configured for plugging in another device such as a TV or VCR.

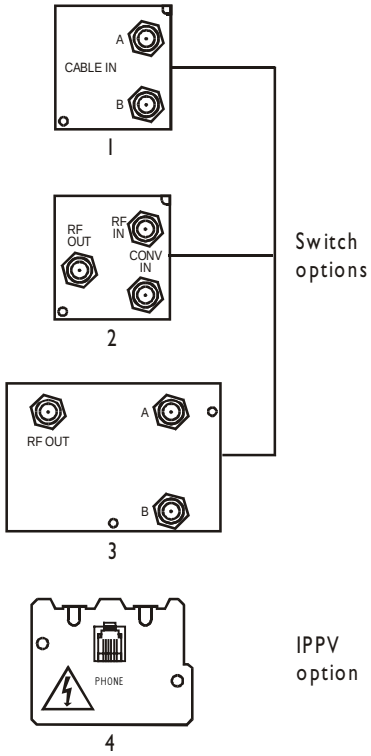

Rear Panel Options

There are four rear panel options that can be included on your DCT 2000.

	Item	Description
1	**A/B Switch**	This contains coaxial input connectors used in a dual cable system and with an A/B box.
2	**RF Bypass**	These coaxial connectors enable the cable signal to bypass the DCT 2000 and go directly to a cable-ready TV or VCR.
3	**DUAL A/B-RF BYPASS**	These coaxial connectors are used in a dual cable system. The cable signal from A or B goes directly to a cable-ready TV or VCR.
4	**Telco Return**	The Telco Return Impulse Pay-Per-View option is a telephone connection module that enables you to purchase special programming on one-way cable systems.

RECORDING YOUR CONNECTIONS

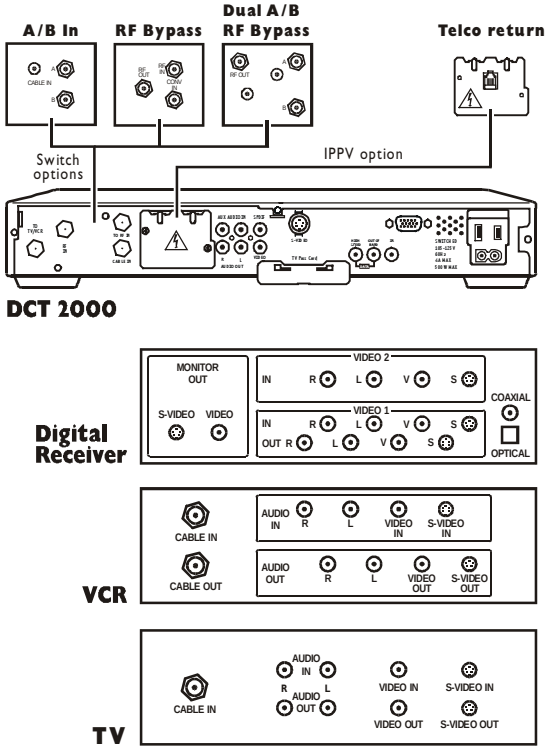

Use this diagram to record cable connections from the rear panel. Later you can use this diagram to reconnect your system if you move the equipment, or add new equipment.

Disconnect the power from the DCT 2000 before connecting or changing cable connections. Do not place another component or object on top of the DCT 2000.

USING THE REMOTE CONTROL

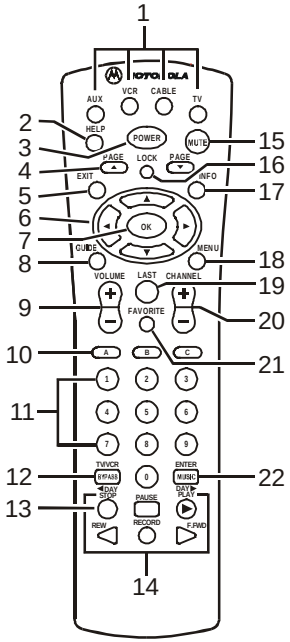

Use the remote control to operate the DCT 2000, TV, and VCR. Many of the keys on the remote control share the same function as keys on the front panel.

Your remote control may be different from the one illustrated here. The remote control must be programmed for use. If your service provider has not programmed your remote control, refer to the remote control instruction guide supplied by your service provider.

USING THE REMOTE CONTROL

Key	Item	Description
1	**AUX, VCR, CABLE, or TV**	Selects the desired device to control (the selected mode remains active until you press another key)
2	**HELP**	Displays the help screen
3	**POWER**	Turns the selected home entertainment component on or off
4	**PAGE ▲ or PAGE▼**	Pages through menu screens and electronic program guide
5	**EXIT**	Exits menus and electronic program guide
6	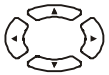	Moves cursor around the electronic program guide and menu screens
7	**OK/SELECT**	Selects menu options and Pay-Per-View events, or tunes programs from the electronic program guide (your remote may only have OK; this key performs the same functions)
8	**GUIDE**	Displays the electronic program guide

Key	Item	Description
9	**VOLUME + or VOLUME -**	Increases or decreases volume of the currently selected device
10	**A, B , or C**	Functionality is determined by your service provider
11	**NUMBER KEYS**	Directly selects a channel
12	**TV/VCR BYPASS**	Enables RF bypass function (a cable-ready TV is required for this function)
13	**◄ DAY DAY ►**	Use when operating the electronic program guide (moves electronic program guide ahead or back 24 hours)
14	**STOP, PAUSE, PLAY, REW, RECORD, F.FWD**	Controls the VCR
15	**MUTE**	Toggles the sound on and off

Key	Item	Description
16	**LOCK/PPV**	Limits viewing of selected programs, and accesses Pay-Per-View menu (your remote control may only have LOCK; this key still performs the same functions)
17	**INFO**	Displays the current channel and program information (not supported by all applications)
18	**MENU**	Displays the Main menu
19	**LAST**	Recalls the last channel or goes back one screen in the menu
20	**CHANNEL + or CHANNEL -**	Changes the channels up or down
21	**FAVORITE**	Displays preset favorite cable channels
22	**ENTER/MUSIC**	Displays digital music channel menus (on some TV models, press to enter channels)

Installing Batteries

Before you can use the remote control, you must install two AA (1.5-volt) alkaline batteries:

1 Slide open the battery door on the back of the remote control.

2 Insert the batteries in the direction indicated on the inside of the battery compartment.

Batteries installed incorrectly can cause battery leakage and corrosion that will damage the remote control.

3 Slide the battery door closed until it snaps into place.

Point the remote control at the DCT 2000, and then press POWER. If the DCT 2000 does not turn on, check the orientation of the batteries or replace with new batteries.

Your remote control may be different from the one illustrated here. Refer to the remote control instruction guide for details on battery installation.

Turning Power On and Off

Press POWER on the front panel to turn the DCT 2000 on or off. If using the remote control, be sure it is in cable mode by pressing CABLE, and then press POWER.

Changing Channels

You can change channels in two ways:

- Press CHANNEL ▲ or ▼ on the front panel of the DCT 2000, or press CHANNEL + or − on the remote control to step through the channel selection.
- Enter the number of the channel you want to tune using the numeric keys on the remote control.

Adjusting the Volume

Press VOLUME + or − on the remote control to adjust the volume. When you adjust the volume, the volume scale is displayed on the screen.
Press MUTE on the remote control to turn the sound off and on again.

For best audio quality, use the remote control to set the DCT 2000 to approximately ¾ of the maximum volume level and then adjust the audio levels on the external devices.

Electronic Program Guide

The electronic program guide displays information about TV programs and enables you to access features such as Parental Control or Pay-Per-View. Electronic program guides can vary in look and feel with each service provider. Reference the electronic program guide instruction manual for detailed instructions.

AUDIO/VIDEO CONNECTIONS

NOTE

It is important to remember not to place anything on top of the DCT 2000 and to provide for adequate ventilation to prevent overheating.

Before you begin to hookup your DCT 2000, review the following:

- For basic cable connections, use 75-ohm coaxial cables equipped with F-type connectors. You can find coaxial cables in your local electronics store.
- For audio or video outputs, use cables equipped with RCA-type connectors.
- Disconnect power from the DCT 2000 before connecting or changing cable connections.
- **Do not** place anything on top of the DCT 2000, especially other home video components.

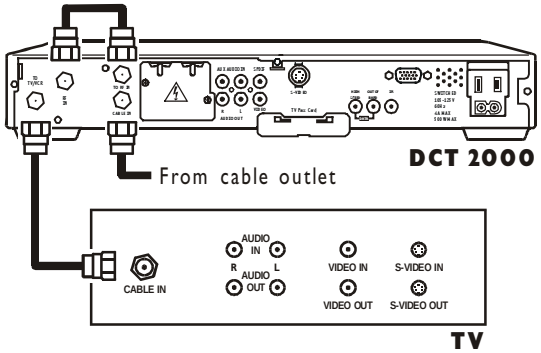

Standard TV Cabling

Use 75-ohm coaxial cables to connect your DCT 2000 to a TV. This is the most common cable connection and provides all of the basic features of the DCT 2000.

If you are using a diagram that connects the coaxial TO TV/VCR connector on the DCT 2000 to the coaxial CABLE IN connector on the TV, you must tune your TV to channel 3 or 4.

The illustrated *connections will not provide stereo on digital channels. Connect the DCT 2000 using RCA baseband connectors to receive stereo on digital channels (illustrated later in this section).*

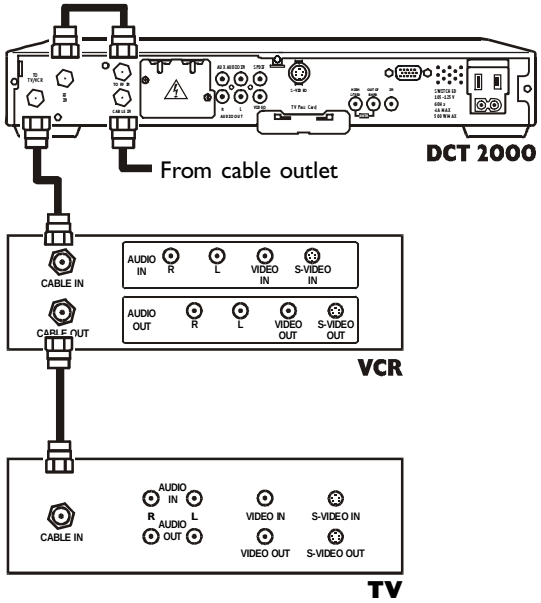

Standard VCR Cabling

To connect your VCR, you will need 75-ohm coaxial cables. The illustrated VCR connection enables you to record the program you are watching, including Pay-Per-View events. You can also view videotapes just as you do now.

The illustrated *connections will not provide stereo on digital channels. Connect the DCT 2000 using RCA baseband connectors to receive stereo on digital channels (illustrated later in this section).*

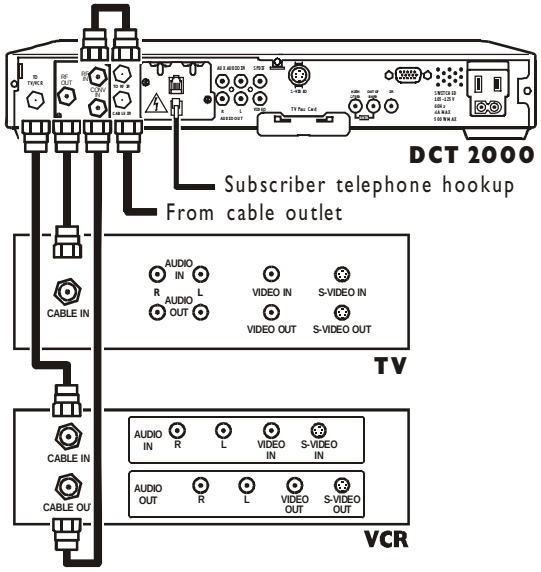

Cabling with RF Bypass

This cabling diagram illustrates the RF Bypass module installed on the DCT 2000. The RF Bypass enables you to view an unscrambled analog channel on a TV while recording another channel through the DCT 2000.

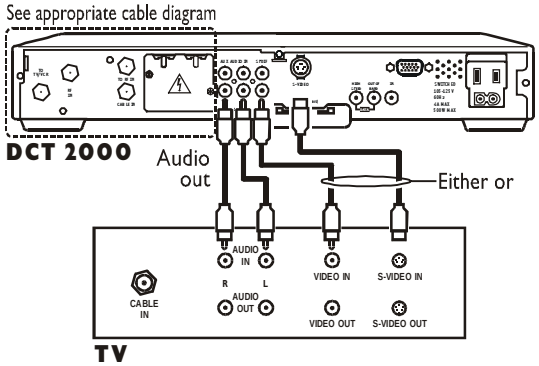

In these illustrations the baseband connectors on entertainment components are labeled R for right audio, L for left audio, V or VIDEO, and S or S-VIDEO.

Composite Baseband and S-Video

Connecting the DCT 2000 using the baseband RCA type outputs enables you to experience stereo and Dolby Surround® sound on digital channels when available.

When connecting the video path, never connect baseband composite video and S-Video together. Because some entertainment equipment will not support both video inputs simultaneously, use only one connection path.

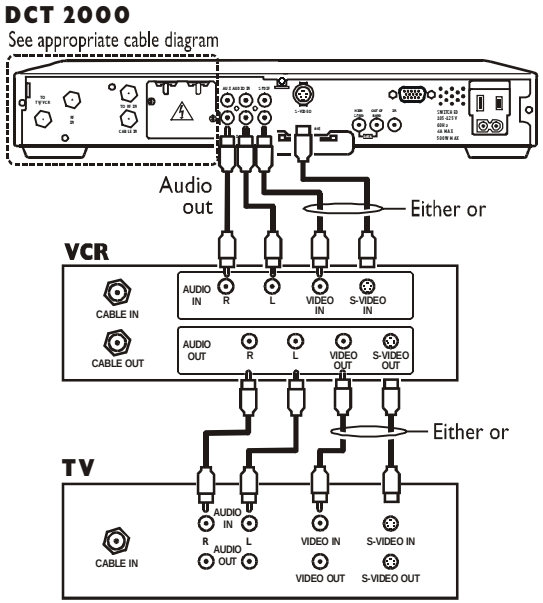

Composite VCR Cabling

This diagram illustrates how to connect the DCT 2000 to a VCR using the audio connectors on the VCR.

When connecting the video path, never connect baseband composite video and S-Video together. Because some entertainment equipment will not support both video inputs simultaneously, use only one connection path.

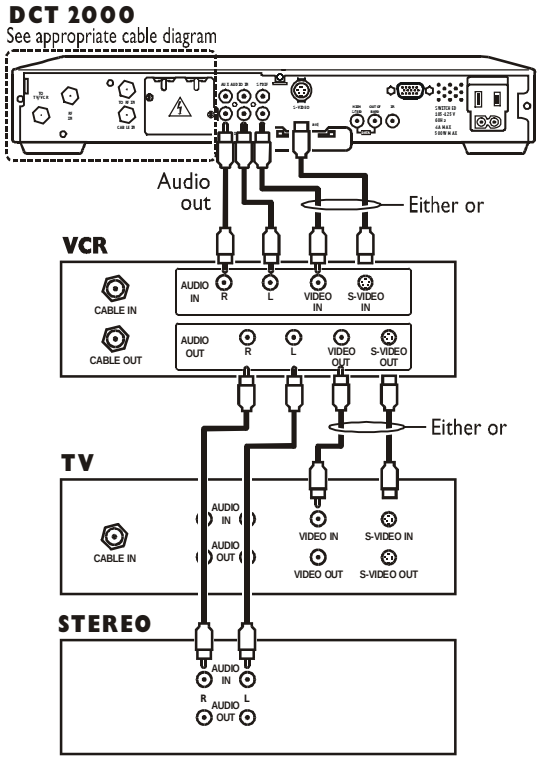

Stereo Cabling Diagram (VCR to Stereo)

This diagram illustrates how to connect the DCT 2000 to a stereo using the audio connectors on the VCR. The VCR sound is played through the stereo. This configuration does not provide for TV sound to play through the stereo.

When connecting the video path, never connect baseband composite video and S-Video together. Because some entertainment equipment will not support both video inputs simultaneously, use only one connection path.

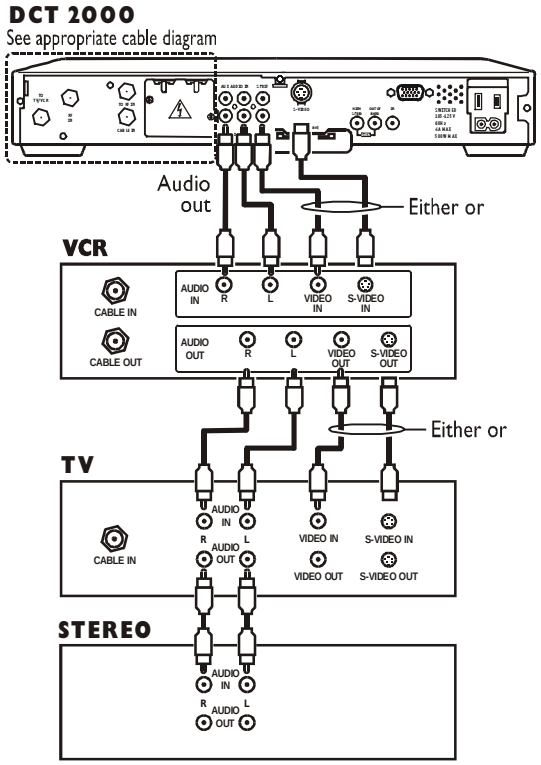

Stereo Cabling Diagram (TV to Stereo)

This configuration provides for the TV sound to play through the stereo.

When connecting the video path, never connect baseband composite video and S-Video together. Because some entertainment equipment will not support both video inputs simultaneously use only one connection path.

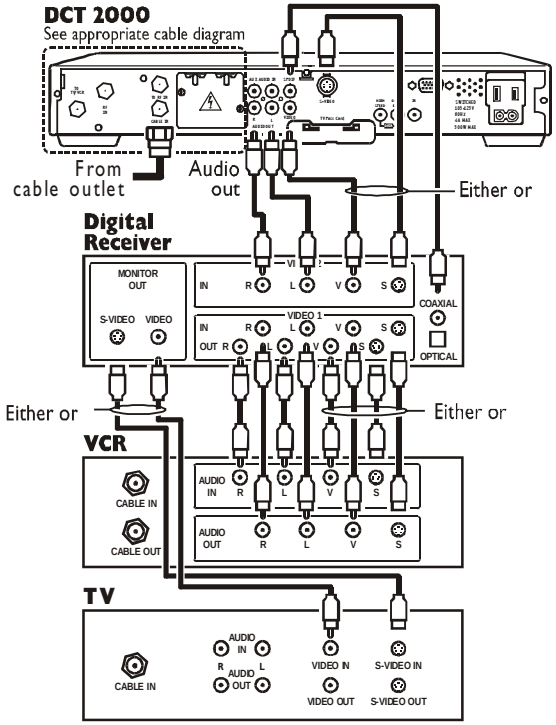

Baseband with Dolby Digital

This diagram illustrates audio and video connections to a Dolby Digital receiver. This configuration enables you to record on the VCR and playback with sound through the Dolby Digital receiver.

If you use the Dolby Digital SPDIF output, you must connect both the left/right baseband audio out from the DCT 2000 and the SPDIF ports to the digital receiver. The SPDIF port does not carry audio for analog.

TROUBLESHOOTING

Before calling your service provider, review the troubleshooting guide. This information is to help you quickly solve a problem. If your problem still exists, contact your service provider.

Problem	Possible Solution
No sound	Press MUTE on the remote control to restore the volume level. Check that the stereo is looking at the proper input source. Turn your VCR on.
No picture	Check to be sure that all cables are connected properly (hand-tighten if necessary). If connected through the baseband RCA video connection, make sure the cables are connected properly. If you are watching TV using your VCR, be sure your VCR is on.
Picture or sound is noisy on one channel	Reconnect the cable and hang-tighten if loose.
Sound from only one stereo speaker	Hand-tighten or reconnect the cables properly. Be sure wires are not frayed and plugs are not bent or broken.

TROUBLESHOOTING

Problem	Possible Solution
No power	Reconnect the power cord. Be sure the DCT 2000 is plugged into an outlet that is always live.
Remote control does not work	Press CABLE on the remote control to ensure the remote control is in cable mode. Change the batteries in your remote control according to the instructions in the section, "Installing Batteries." Ensure that nothing is on the DCT 2000 or blocking a clear line of sight between it and the remote control.
Poor audio quality	For best audio quality, use the remote control to set the DCT 2000 to approximately 75% of maximum volume level and then adjust the audio levels on the external devices.

466836-001-99 1/00